C.P.T.
Precision Tools

Swiss Line

New Products

Metric 2017

CONTENTS: Page:

Polygon Swiss Line 1

Product Identification 2
Grooving 3
Grooving and Profiling (full radius) 3
Parting Off 4
Back Turning 5
Front Turning 5
Threading - Partial Profile 60° 6
Threading - Partial Profile 55° 6
External Toolholders - Polygon 7
Product Identification 7
Working method 8
Cutting Data 9

6 Cutting Edges Turning Insert - G6 10

Product Identification 11
Grooving 12
Grooving and Profiling (full radius) 12
Parting Off 13
Back Turning 14
Front Turning 14
Threading - Partial Profile 60° 15
Threading - Partial Profile 55° 15
External Toolholders - G6 16
Product Identification 16
Cutting Data 17

Polygon Swiss Line

CPT extends the Swiss Line range by offering a new type of polygon insertsand tool holders for external turning, grooving, parting and threading on Swiss-Type machines. Dedicated especially for small parts machining.

Features

- High precision ground inserts.
- All inserts can be used with same tool holders.
- A combination of carbide and the latest developed coating guarantees maximum tool life and improved productivity.
- For a wide range of materials.
- Coated holders provides abrasive resistance.

Carbide grade: BLU, K20

Product Identification

Polygon Inserts

G | | 25 | R | W07 | T25 | BLU

G = Swiss Groove

R = Full Radius
P = Parting
B = Back Turning
F = Front Turning
T = Threading

Insert Size
L = 25 mm

R = Right Hand Cutting
L = Left Hand Cutting
RR = Right Hand Cutting Right version
RL = Right Hand Cutting Left version
LR = Left Hand Cutting Right version
LL = Left Hand Cutting Left version
RN = Right Hand Cutting Neutral version
LN = Left Hand Cutting Neutral version

Width
W05 = 0.5 mm
W07 = 0.75 mm

Radius
R04 = 0.4 mm
R05 = 0.5 mm

A30 = 30°

A60 = 60° thread
A55 = 55° thread

Depth
T15 = 1.5 mm
T25 = 2.5 mm

T43 = 4.3 mm
T58 = 5.8 mm

Carbide Grade:
BLU = PVD triple coating
K20 = Uncoated

Grooving

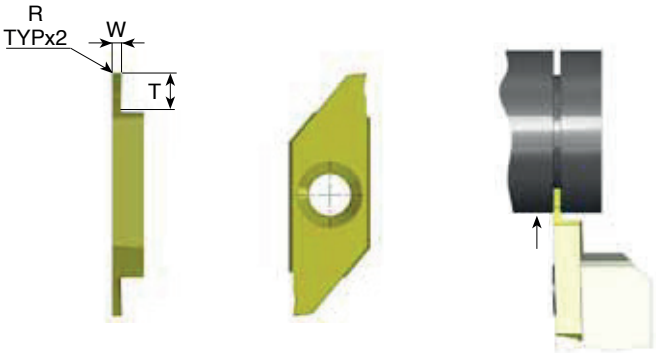

Right hand cutting

Ordering Code	W ± 0.02	T max	R	Feed mm/rev
G25 R W05 T15	0.5	1.5	0	0.01-0.06
G25 R W07 T25	0.75	2.5	0	0.02-0.07
G25 R W10 T27	1.0	2.7	0.05	0.02-0.09
G25 R W12 T30	1.2	3.0	0.05	0.02-0.10
G25 R W15 T38	1.5	3.8	0.05	0.02-0.12
G25 R W20 T38	2.0	3.8	0.05	0.02-0.13
G25 R W25 T38	2.5	3.8	0.05	0.02-0.14

* For L.H, specify G25 L instead of G25 R

	K20	BLU
P		●
M	●	●
K	●	○
N	●	
S	●	●
H		≤45 HRc

Grooving and Profiling (full radius)

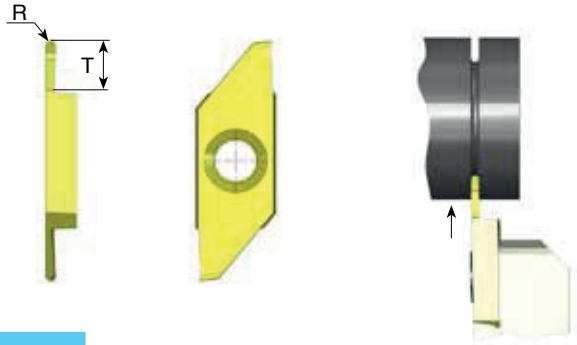

Right hand cutting

Ordering Code	R ± 0.03	T max	Feed mm/rev
GR25 R R02 T15	0.25	1.5	0.01-0.06
GR25 R R04 T25	0.40	2.5	0.02-0.07
GR25 R R05 T27	0.50	2.7	0.02-0.09

* For L.H, specify GR25 L instead of GR25 R

● First choice ○ Alternative

Parting Off

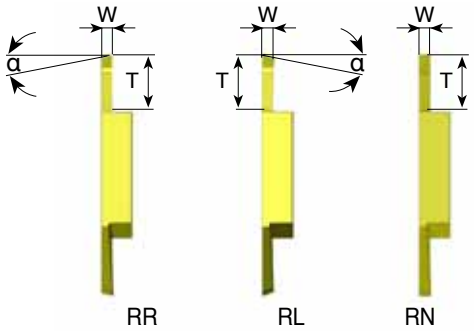

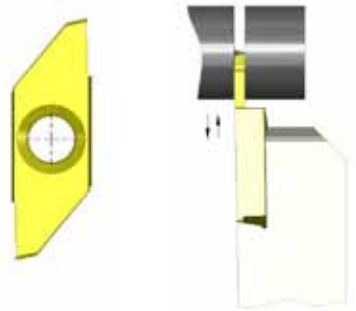

Right hand cutting

Ordering Code	W	α°	T max	Feed mm/rev
GP25 RR W07 T43	0.7	15	4.3	0.02-0.08
GP25 RL W07 T43	0.7	15	4.3	0.02-0.08
GP25 RN W07 T43	0.7	0	4.3	0.02-0.08
GP25 RR W15 T58	1.5	15	5.8	0.02-0.013
GP25 RL W15 T58	1.5	15	5.8	0.02-0.013
GP25 RN W15 T58	1.5	0	5.8	0.02-0.013
GP25 RR W20 T58	2.0	15	5.8	0.02-0.013
GP25 RL W20 T58	2.0	15	5.8	0.02-0.013
GP25 RN W20 T58	2.0	0	5.8	0.02-0.013
GP25 RR W25 T58	2.5	15	5.8	0.04-0.13
GP25 RL W25 T58	2.5	15	5.8	0.04-0.13
GP25 RN W25 T58	2.5	0	5.8	0.04-0.13

	K20	BLU
P		●
M	●	●
K	●	○
N	●	
S	●	●
H		≤45 HRc

* For L.H, specify GP25 LR instead of GP25 RR
GP25 LL instead of GP25 RL
GP25 LN instead of GP25 RN

● First choice ○ Alternative

C.P.T. Precision Tools

Back Turning

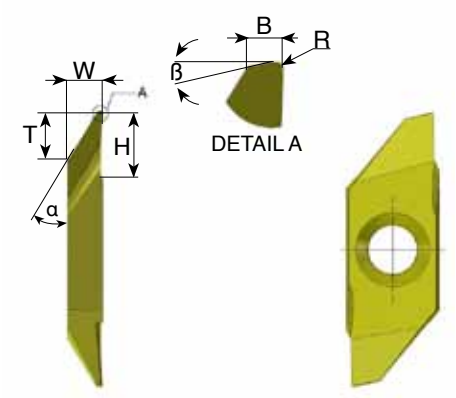

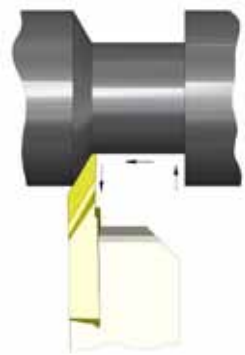

Right hand cutting

Ordering Code	α°	ß°	R	W	T max	B	H	Feed mm/rev
GB25 R A30 R03	30	15	0.03	3.0	4.0	0.5	8.0	0.05-0.12
GB25 R A30 R10	30	15	0.10	3.0	4.0	0.5	8.0	0.05-0.12

	K20	BLU
P		●
M	●	●
K	●	○
N	●	
S	●	●
H		≤45 HRc

* For L.H, specify GB25 L instead of GB25 R

Front Turning

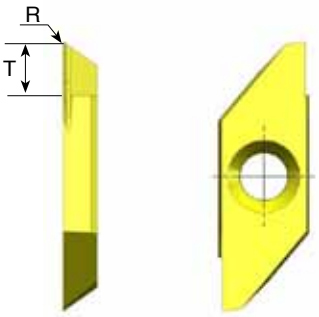

Right hand cutting

Ordering Code	T max	R	Feed mm/rev
GF25 R T40	4.0	0.03	0.05-0.12

* For L.H, specify GF25 L instead of GF25 R

● First choice ○ Alternative

Threading - Partial Profile 60°

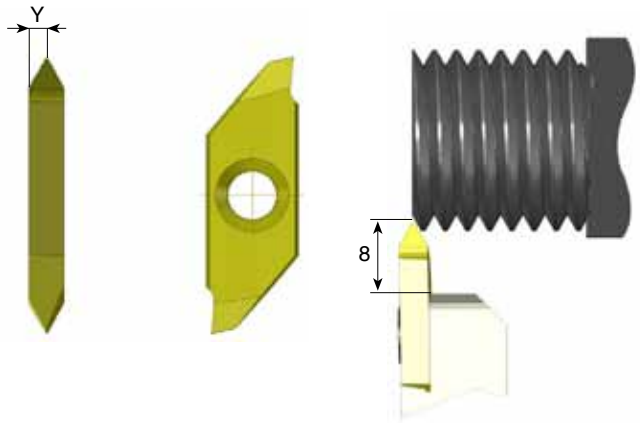

Right hand cutting

Ordering Code	Pitch Range mm	Pitch Range TPI	Y
GT25 R A60	0.25-0.8	100-32	0.7
GT25 R G60	1.0-3.0	24-8	1.6

* For L.H, specify GT25 L instead of GT25 R

	K20	BLU
P		●
M	●	●
K	●	○
N	●	
S	●	●
H		≤45 HRc

Threading - Partial Profile 55°

Right hand cutting

Ordering Code	Pitch Range mm	Pitch Range TPI	Y
GT25 R A55	0.5-1.5	48-16	1.0
GT25 R G55	1.75-3.0	14-8	1.6

* For L.H, specify GT25 L instead of GT25 R

● First choice ○ Alternative

External Toolholders - Polygon

Product Identification

PG	E	R	1010	K
PG = Polygon Swiss toolholder	E = External	R = Right Hand L = Left Hand	Shank Cross Section 1010 = 10x10 mm	Length of Toolholders K = 125 mm

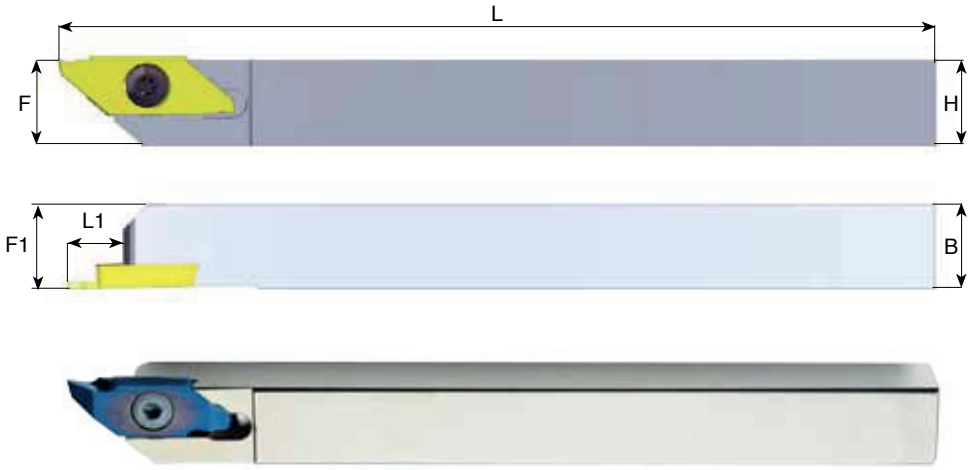

Right hand cutting

Ordering Code	B	H	L1	L	F	F1	Insert Screw Torx +	Key Torx +
PGER 1010 K	10	10	8	125	10	10	S26P	K11P
PGER 1212 K	12	12	8	125	12	12	S26P	K11P
PGER 1616 K	16	16	8	125	16	16	S26P	K11P

* For L.H, specify PGEL instead of PGER

Coated holders provides high abrasive resistance

Working method

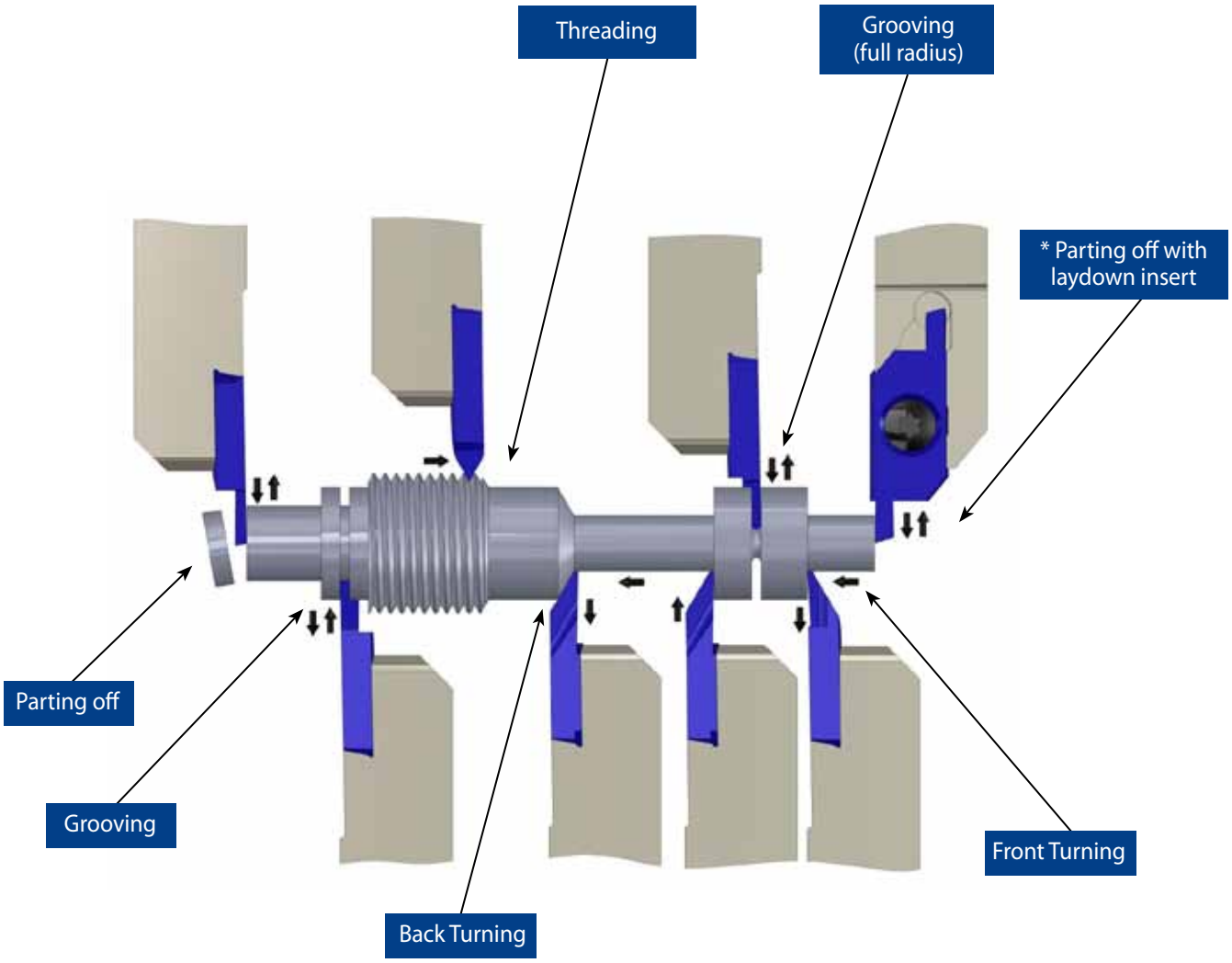

* Available upon request (grooving, parting, threading).

Cutting Data

Polygon Swiss Line

Carbide grades:

BLU PVD triple layer coated Sub-Micron grade for Steel, Stainless Steels, Titanium and hard materials.

K20 Uncoated Sub-Micron carbide grade for Aluminum and non-ferrous materials, Stainless Steels and Titanium.

ISO Standard	Material	Cutting Speed m/min	
		K20	BLU
P	Low and Medium Carbon Steels <0.55%C	-	80-150
	High Carbon Steels ≥0.55%C	-	70-120
	Alloy Steels,Treated Steels	-	40-80
M	Stainless Steel-Free Cutting	30-80	60-120
	Stainless Steel-Austenitic	20-70	30-90
	Cast Steels	30-80	50-120
K	Cast Iron	50-120	60-130
N	Aluminum ≤12%Si, Copper	120-250	-
	Aluminum >12%Si	90-200	-
	Synthetics, Duroplastics, Thermoplastics	70-150	-
S	Nickel Alloys, Titanium Alloys.	20-50	30-70
H	Hardened Steel, ≤45 HRc	-	20-50

6 Cutting Edges Turning Insert - G6

Grooving, parting-off and threading

Benefits

- High productivity and cost efficiency due to six cutting edges.
- One holder for all insert types - Maximum versatility.
- High precision thanks to the fully ground profile.

Features

- Strong and stable clamping due to the unique insert shape.
- Can be used with high machining parameters, and provides high surface finish.
- Internal coolant provides the coolant liquid towards the cutting edge.

Application

- Multi-function inserts for grooving, parting, turning and threading.
- Fit to a large range of diameters from very small applications with a thin wall up to 60 mm diameter.

Carbide grade: BLU, K20.

Product Identification

G6 Inserts

G6

G6 = Swiss Groove with 6 cutting edge

[ ]

R = Full Radius
P = Parting
B = Back Turning
F = Front Turning
T = Threading

R

R = Right Hand Cutting
L = Left Hand Cutting
RR = Right Hand Cutting Right version
RL = Right Hand Cutting Left version
LR = Left Hand Cutting Right version
LL = Left Hand Cutting Left version
RN = Right Hand Cutting Neutral version
LN = Left Hand Cutting Neutral version

W08

Width
W06 = 0.6 mm
W08 = 0.8 mm

Radius
R05 = 0.50 mm
R08 = 0.80 mm

A30 = 30°

A60 = 60° thread
A55 = 55° thread

T14

Depth
T14 = 1.4 mm
T18 = 1.8 mm

T38 = 3.8 mm

BLU

Carbide Grade:
BLU = PVD triple coating
K20 = Uncoated

Grooving

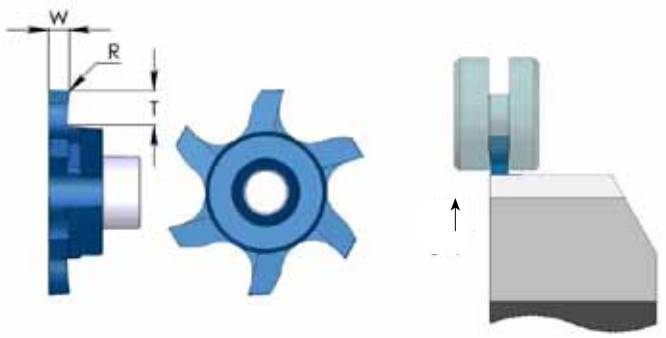

Right hand cutting

Ordering Code	W ± 0.02	T max	R	Feed mm/rev
G6 R W06 T11	0.6	1.1	0	0.01-0.06
G6 R W08 T14	0.8	1.4	0	0.02-0.07
G6 R W10 T18	1.0	1.8	0.05	0.02-0.09
G6 R W15 T33	1.5	3.3	0.05	0.02-0.12
G6 R W20 T38	2.0	3.8	0.10	0.02-0.13
G6 R W25 T38	2.5	3.8	0.10	0.02-0.14

	K20	BLU
P		●
M	●	●
K	●	○
N	●	
S	●	●
H		≤45 HRc

* For L.H, specify G6 L instead of G6 R

Grooving and Profiling (full radius)

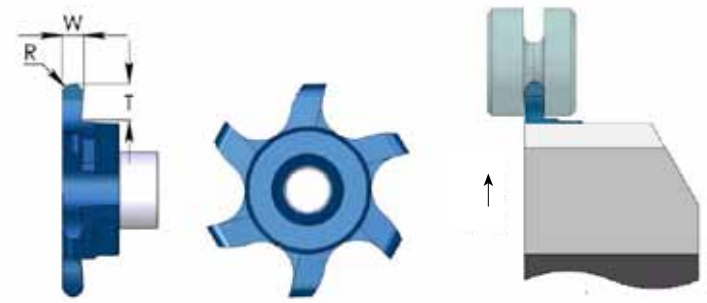

Right hand cutting

Ordering Code	R±0.03	T max	Feed mm/rev
G6R R R05 T25	0.50	2.5	0.02-0.09
G6R R R08 T30	0.80	3.0	0.02-0.09
G6R R R10 T38	1.0	3.8	0.02-0.13
G6R R R12 T38	1.25	3.8	0.02-0.14

* For L.H, specify G6R L instead of G6R R

● First choice ○ Alternative

Parting Off

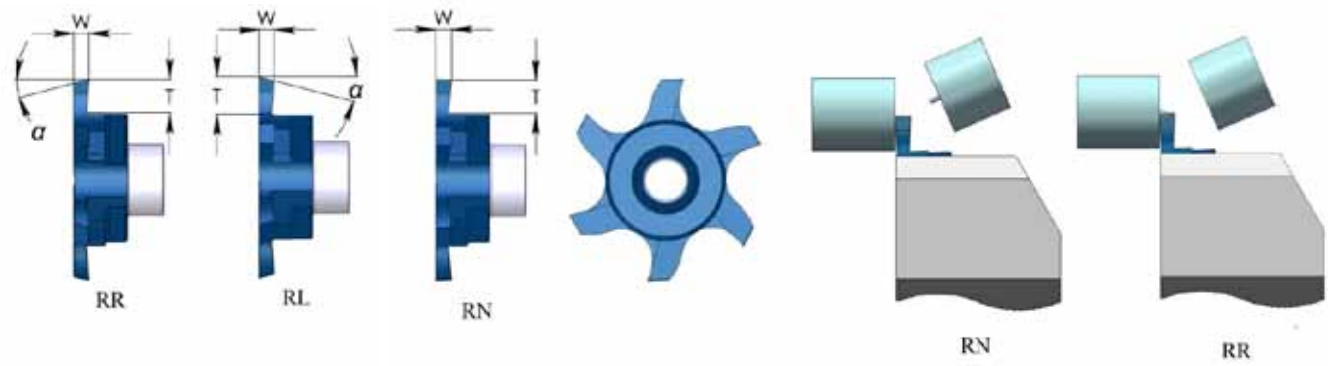

Right hand cutting

Ordering Code	W	α°	T max	Feed mm/rev
G6P RR W10 T38	1.0	15	3.8	0.02-0.09
G6P RL W10 T38	1.0	15	3.8	0.02-0.09
G6P RN W10 T38	1.0	0	3.8	0.02-0.09
G6P RR W15 T38	1.5	15	3.8	0.02-0.13
G6P RL W15 T38	1.5	15	3.8	0.02-0.13
G6P RN W15 T38	1.5	0	3.8	0.02-0.13
G6P RR W20 T38	2.0	15	3.8	0.02-0.13
G6P RL W20 T38	2.0	15	3.8	0.02-0.13
G6P RN W20 T38	2.0	0	3.8	0.02-0.13

	K20	BLU
P		●
M	●	●
K	●	○
N	●	
S	●	●
H		≤45 HRc

* For L.H, specify G6P LR instead of G6P RR
G6P LL instead of G6P RL
G6P LN instead of G6P RN

● First choice ○ Alternative

Back Turning

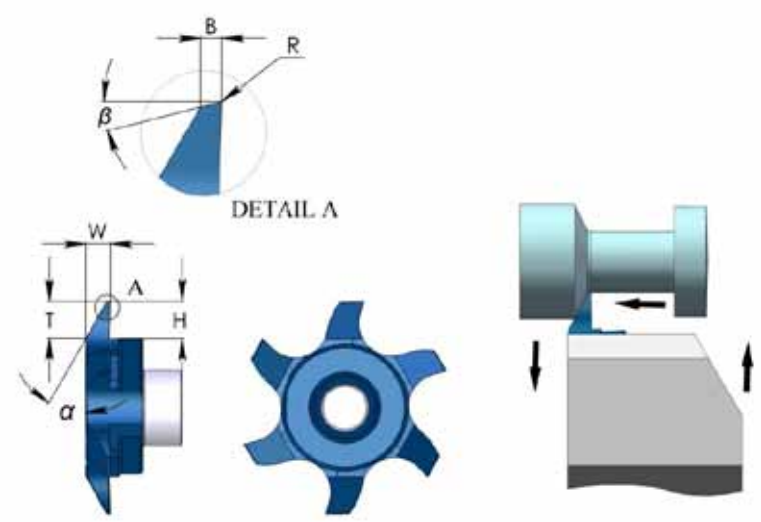

Right hand cutting

Ordering Code	α°	β°	R	W	T max	B	H	Feed mm/rev
G6B R A30	30	12	0.1	2.6	3.8	0.5	3.8	0.05-0.12

* For L.H, specify G6B L instead of G6B R

	K20	BLU
P		●
M	●	●
K	●	○
N	●	
S	●	●
H		≤45 HRc

Front Turning

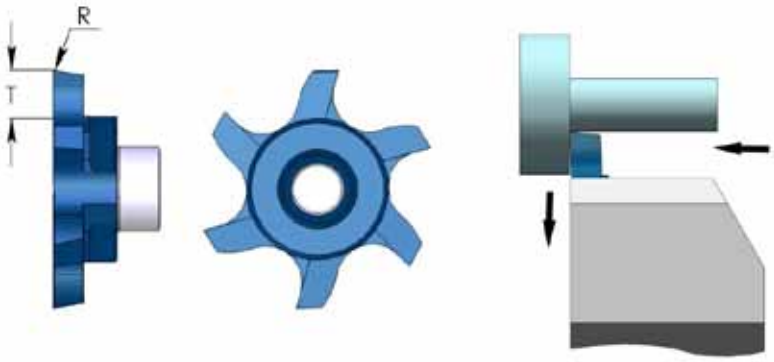

Right hand cutting

Ordering Code	T max	R	Feed mm/rev
G6F R T38	3.8	0.1	0.05-0.12

* For L.H, specify G6F L instead of G6F R

● First choice ○ Alternative

Threading - Partial Profile 60°

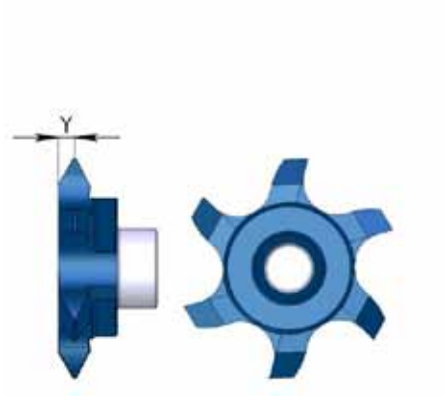

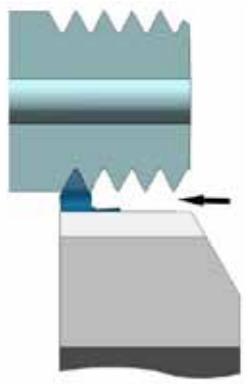

Right hand cutting

Ordering Code	Pitch Range mm	Pitch Range TPI	Y
G6T R A60	0.5-1.5	48-16	0.8
G6T R G60	1.75-3.0	14-8	1.5
G6T R AG60	0.5-3.0	48-8	1.5

* For L.H, specify G6T L instead of G6T R

	K20	BLU
P		●
M	●	●
K	●	○
N	●	
S	●	●
H		≤45 HRc

Threading - Partial Profile 55°

Right hand cutting

Ordering Code	Pitch Range TPI	Pitch Range mm	Y
G6T R A55	48-16	0.5-1.5	0.8
G6T R G55	14-8	1.75-3.0	1.5
G6T R AG55	48-8	0.5-3.0	1.5

* For L.H, specify G6T L instead of G6T R

● First choice ○ Alternative

External Toolholders - G6

Coolant through toolholders, for external turning in Swiss type lathes machines. The high pressure coolant is directed towards the insert cutting edge in order to evacuate the chips created and avoid build up edge.
Including a coolant connector for fast attachment on the machine.

Product Identification

G6	E	R	1212	K
G6 = Swiss toolholder	E = External	R = Right Hand L = Left Hand	Shank Cross Section 1212 = 12x12 mm	Length of Toolholders K= 125 mm M= 150 mm

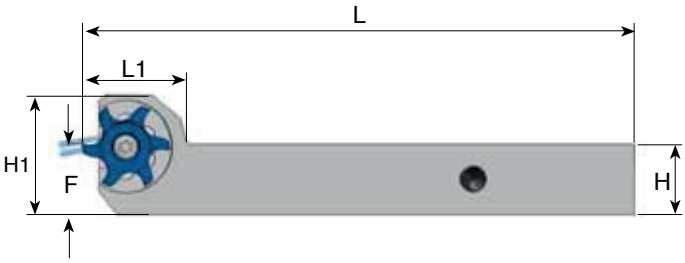

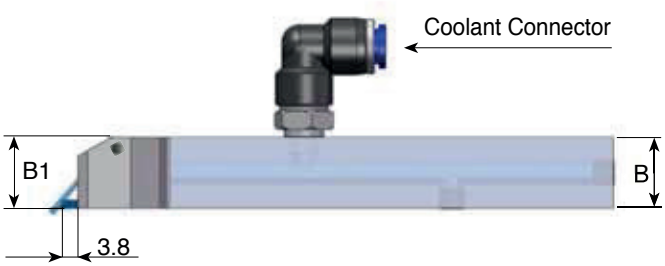

Right hand cutting

Ordering Code	B	H	L1	L	H1	F	B1	Insert Screw Torx +	Torx + Key	**Coolant connector (mm)
* G6ER 1212 K	12	12	20	125	23	12	16	S16LP	K16P	Ø4 / Ø6
G6ER 1616 K	16	16	20	125	27	16	16	S16LP	K16P	Ø4 / Ø6
G6ER 2020 K	20	20	20	125	31	20	20	S16LP	K16P	Ø4 / Ø6
G6ER 2525 M	25	25	20	150	36	15	25	S16LP	K16P	Ø4 / Ø6

* Without internal coolant
** Coolant pipe diameter
For L.H, specify G6EL instead of G6ER
Coated holders provides high abrasive resistance

Cutting Data

G6 Inserts

Carbide grades:

BLU PVD triple layer coated Sub-Micron grade for Steel, Stainless Steels, Titanium and hard materials.

K20 Uncoated Sub-Micron carbide grade for Aluminum and non-ferrous materials, Stainless Steels and Titanium.

ISO Standard	Material	Cutting Speed m/min	
		K20	BLU
P	Low and Medium Carbon Steels <0.55%C	-	80-150
	High Carbon Steels ≥0.55%C	-	70-120
	Alloy Steels,Treated Steels	-	40-80
M	Stainless Steel-Free Cutting	30-80	60-120
	Stainless Steel-Austenitic	20-70	30-90
	Cast Steels	30-80	50-120
K	Cast Iron	50-120	60-130
N	Aluminum ≤12%Si, Copper	120-250	-
	Aluminum >12%Si	90-200	-
	Synthetics, Duroplastics, Thermoplastics	70-150	-
S	Nickel Alloys, Titanium Alloys.	20-50	30-70
H	Hardened Steel, ≤45 HRc	-	20-50

C.P.T.
Precision Tools

© Copyright C.P.T. GmbH 2017

C.P.T. Swiss Line N.P. 03/2017 Metric

C.P.T. GmbH
Lilienthalstraße 3, 70825 Korntal-Muenchingen, Germany
Tel: +49 (0) 711 814 7730, Fax: +49 (0) 711 814 77320
E-Mail: info@cpt-werkzeuge.de Homepage: www.cpt-werkzeuge.de